FERMOD FLOOR GUIDED SLIDING DOOR HARDWARE KITS

F2135 Installation Guide - 2018

FERMOD®

Fermod F2135 Floor Guided Sliding Door System

General Characteristics

This is a manual system with an anodized rail designed to fit horizontal sliding doors with specific characteristics, (isothermal, acoustical, clean-rooms, dust tight).

When the door is closed, tightness of the door against the frame is achieved by 2 rollers moving down the ramps and in against the door frame.

When the door is open, the 2 rollers come up the ramps and the door moves away from the floor & frame. This means that the door seals are only in contact when the door is in a closed position. The rollers run effortlessly along the rail until they reach the end of the track stop.

This system is suitable for doors within the following specifications:

Specification	Minimum	Maximum
Door Blade Width	1701mm	2000mm
Door Blade Height	-	2700mm
Door Blade Thickness	50mm	150mm
Door Weight	-	80kg

The operating temperature is between -30 °C and +55 °C.

The maximum noise level generated when the door operates is lower than 85dB.

The lever handle recommended for use with this system are as follows:

Internal Lever Handle :
F8530, F8530P (Packer)
External Lever Handle.
F8730-70/115K Used for door blades including gasket between 70mm and 115mm thick.
F8730-115/160K Used for door blades including gasket 115mm and 160mm thick.

IMPORTANT INFORMATION

1. Due to the varying density of wall panel types used in Australia, CRH Australia **STRONGLY** recommends that an aluminium Support Rail is securely fixed to the panel wall and then the Track Rail Brackets are secured into or through the Support Rail.

2. The installation drawing that follows in these instructions are all based on the fact that the Track Rail Brackets are Flush with the face of the door frame, i.e. they are both offset the same distance from the wall panel.

3. As the L shaped Track Rail Brackets need to be packed out the same distance as the face of the door frame it is suggested that the Support Rail also serves as the packer.

IMPORTANT- THE SUPPORT RAIL/PACKER MUST BE THE SAME THICKNESS AS THE DOOR FRAME.

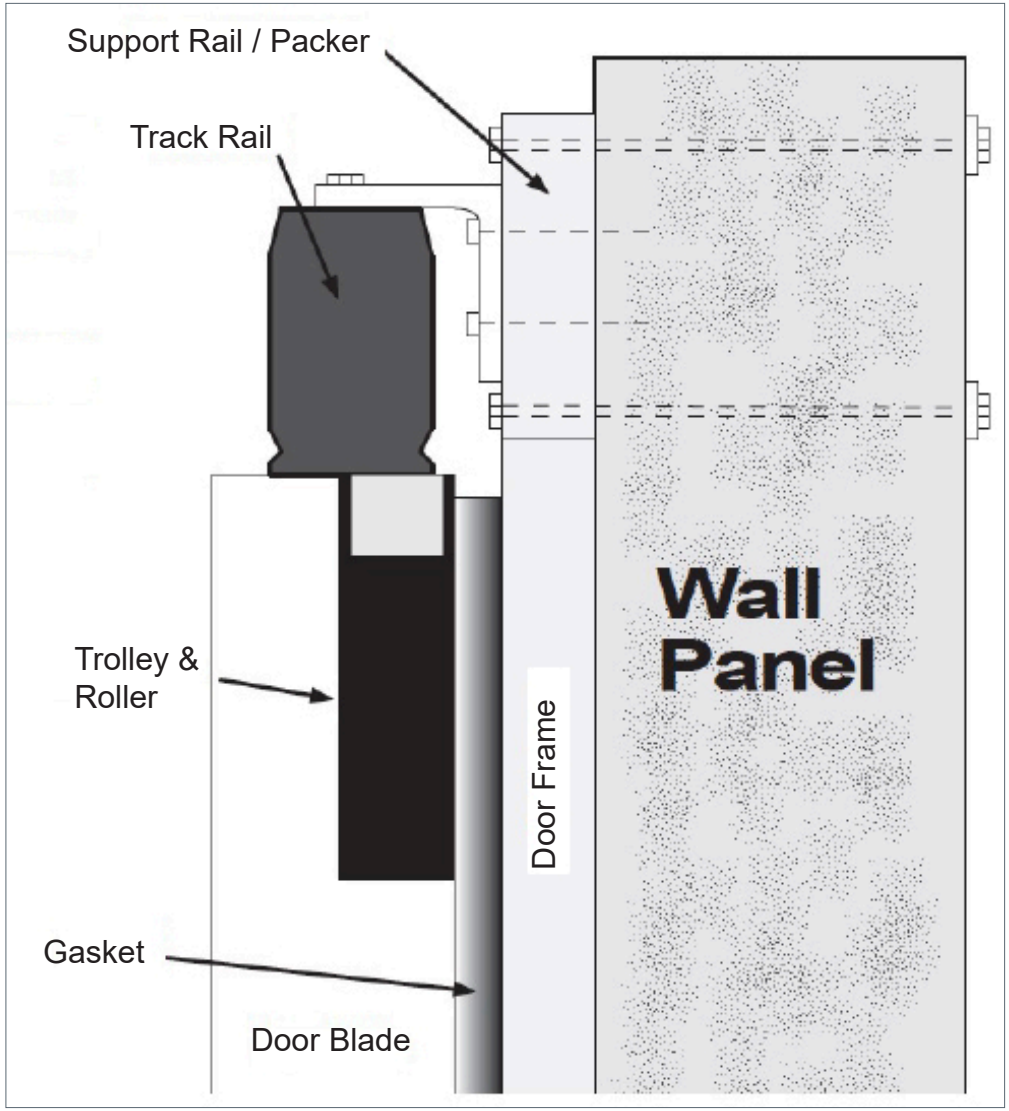

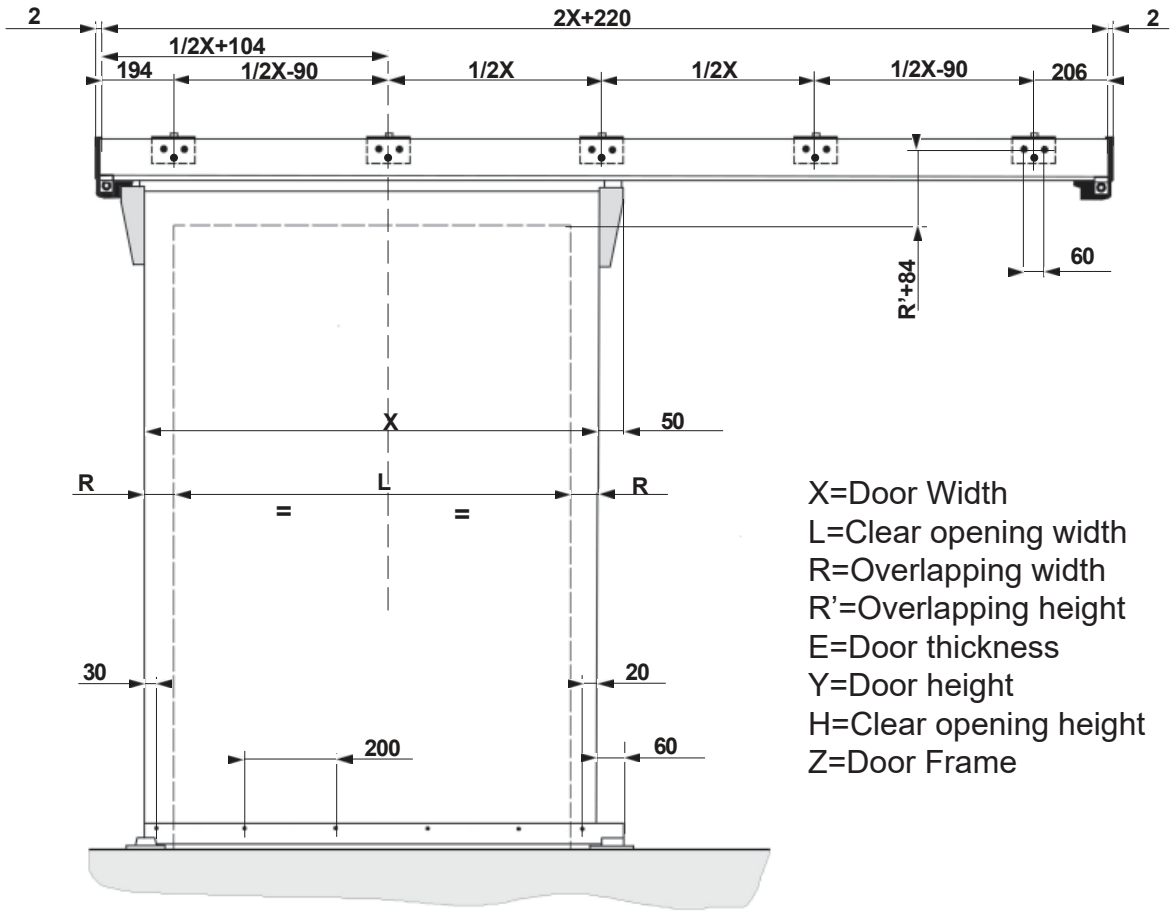

X=Door Width
L=Clear opening width
R=Overlapping width
R'=Overlapping height
E=Door thickness
Y=Door height
H=Clear opening height
Z=Door Frame

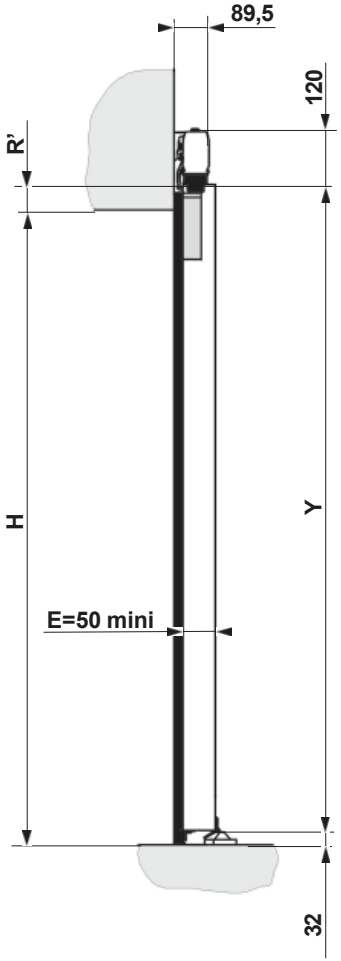

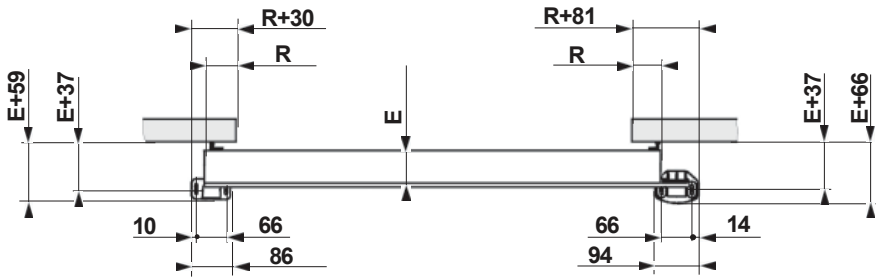

Components Supplied

Ref	Description
A1	Rail (1)
A2	Running Profile (1)
A3	Floor Guide Profile (1)
A4	Ramp (2)
A5	Running profile end clamp (2)
A6	Rail stop opening side (1)
A7	Rail stop closing side (1)
A8	Rail holder & screw (5) (3 for F2131)
A9	Rail holder
A10	Rail upper cover (1)
A11	Frame gasket (1)
A12	Frame gasket fixing profile (3)
A13	Frame gasket corner profile (2)
A14	Floor gasket fixing profile (1)
A15	Floor Gasket (1)
A16	Gasket fixing bolt & nuts (Not Included in Kit)
A17	Floor Guide Opening Side (1)
A18	Floor Guide Closing Side (1)
A19	Roller + trolley RH
A20	Roller + trolley LH
A21	Door bracket/Door RH
A22	Door bracket/Door LH
A23	Trolley cover
A24	Complete roller assembly RH (1)
A25	Complete roller assembly LH (1)
A26	Rail end cap (2)

What is NOT supplied in your Fermod Wall Guided Sliding Door Kit.

- Fasteners
- Aluminium Support Rail
- Sliding door blade.
- Door frame.

Required Fasteners (Not Supplied)

19 Screws or anchor bolts M8x40mm
4 Masonry Anchors 14G x 70mm
12 screws TR M5x30mm
50 to 100 TR M4x25mm

Door Blade Construction

Each contractor may have their own method of insulated door construction. The Fermod Floor Guided Hardware Kit does require metal anchoring points to be constructed within the door blade that can be drilled & tapped to secure key components such as:

- Left hand & right hand trolley assemblies.
- External Lever Handle.

It is recommended that the metal anchoring points are 10mm thick.

External Lever Handle anchoring - Recommended fastener height from the bottom of the door:

Lower	1170mm
Upper	1240mm

Door size construction should also allow for the Fermod Gasket supplied in the kit. F8511 Frame Gasket - 35mm Height, F250 Floor Gasket - 35mm Height.

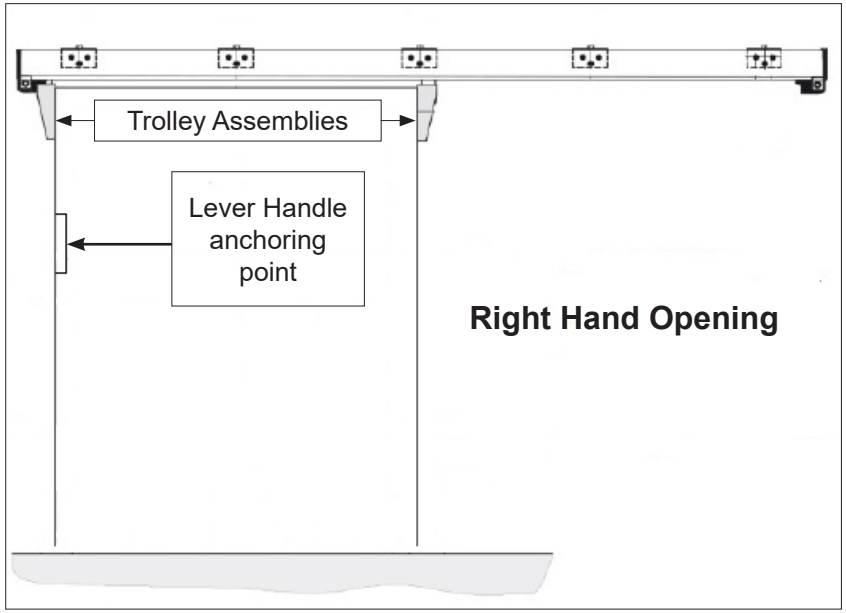

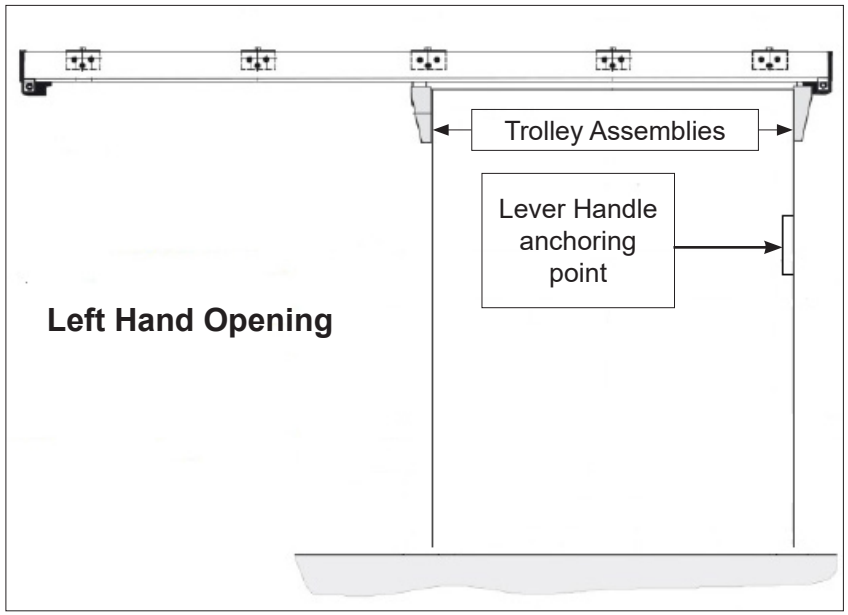

Step 1.

Attach the frame gasket supplied to the internal side of the door blade using the fixing strip & corners.

For negative temperature doors purchase the “Negative Temperature Kit” which will include the extra run of frame gasket.

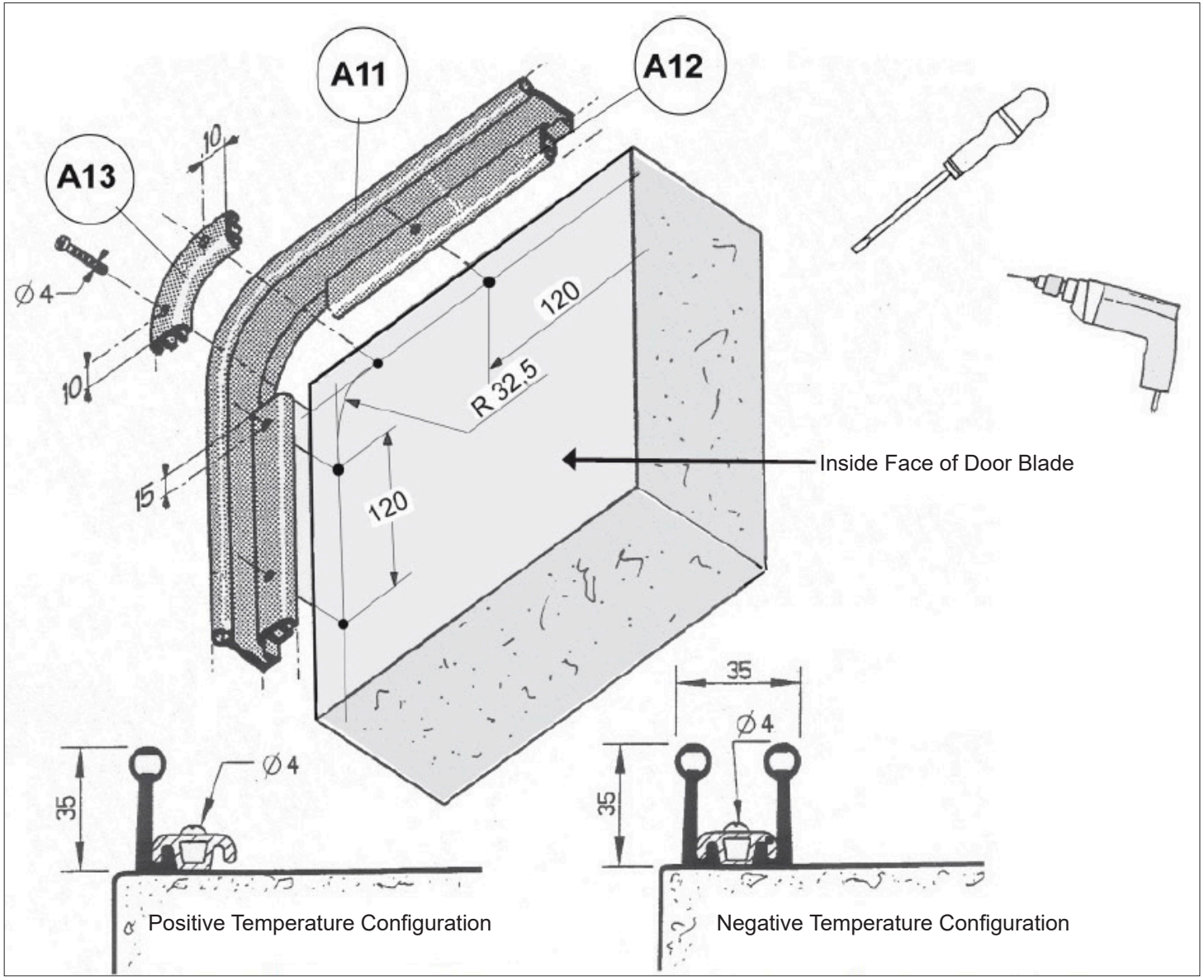

NOTE:

Negative temperature means doors operating below zero degrees celsius

Step 2.

Attach the floor gasket to the bottom of the door blade.

Ensure to bolt through where the frame & floor Gasket fixing strips meet. Nylon bolts are provided in the kit for this purpose. (A16)

For negative temperature doors, 2 runs of floor gasket are recommended. Purchase a “Negative Temperature Kit” which will include the extra run of floor gasket and fixing profile.

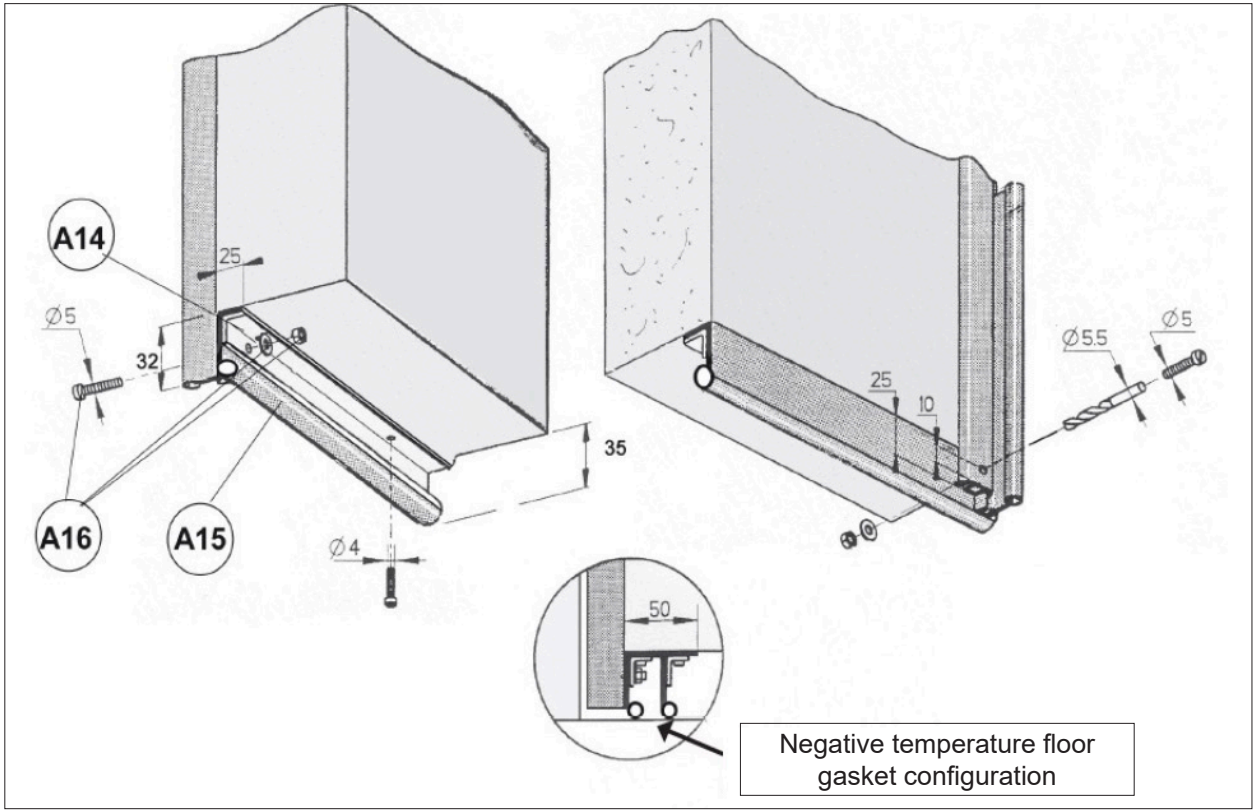

Step 3.

Cut the Floor Guide Rail to the correct length.

DO NOT CUT THE GUIDE RAIL ON THE CLOSING SIDE.

Once the guide rail has been cut to the correct length file the sharp top corner to a small smooth radius.

X= Total door blade width.

Example:

If the total door blade width is 1600mm the cut floor guide rail length is 1660mm.

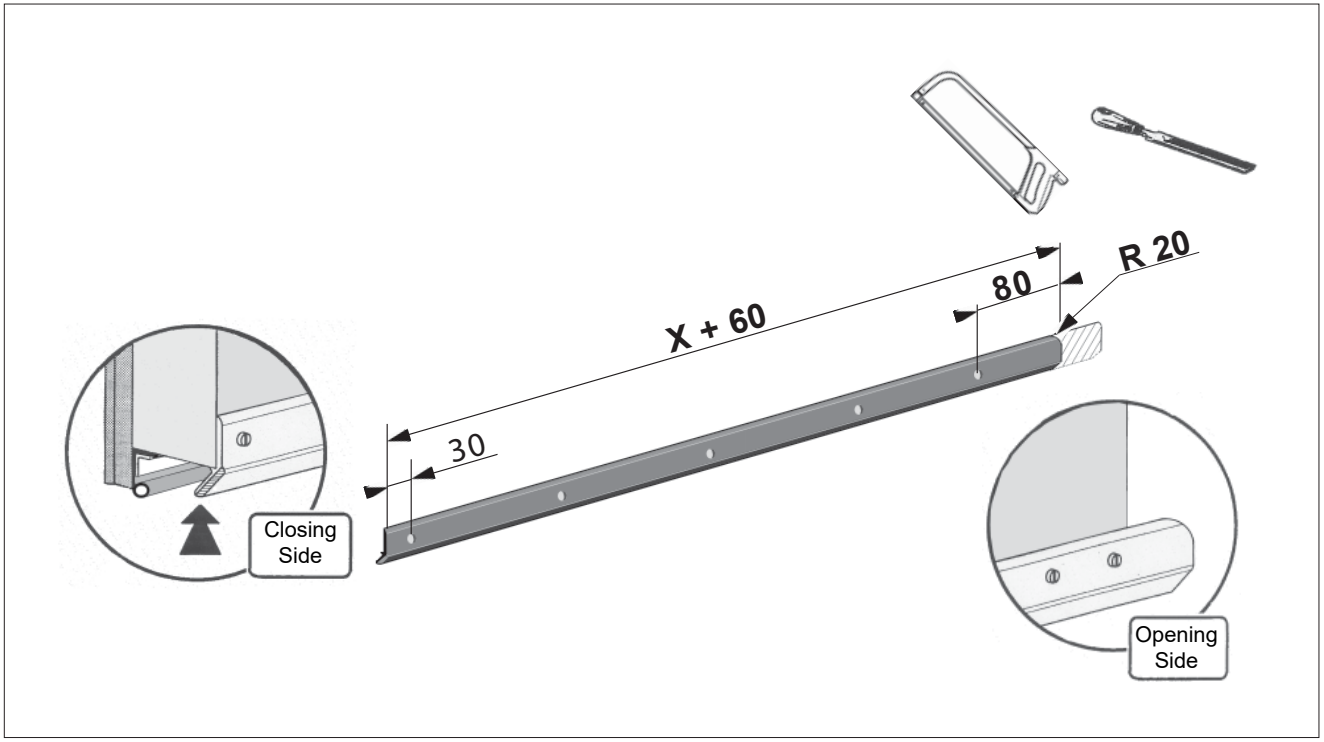

Step 4.

Attach the floor guide rail to the front face of the door blade.

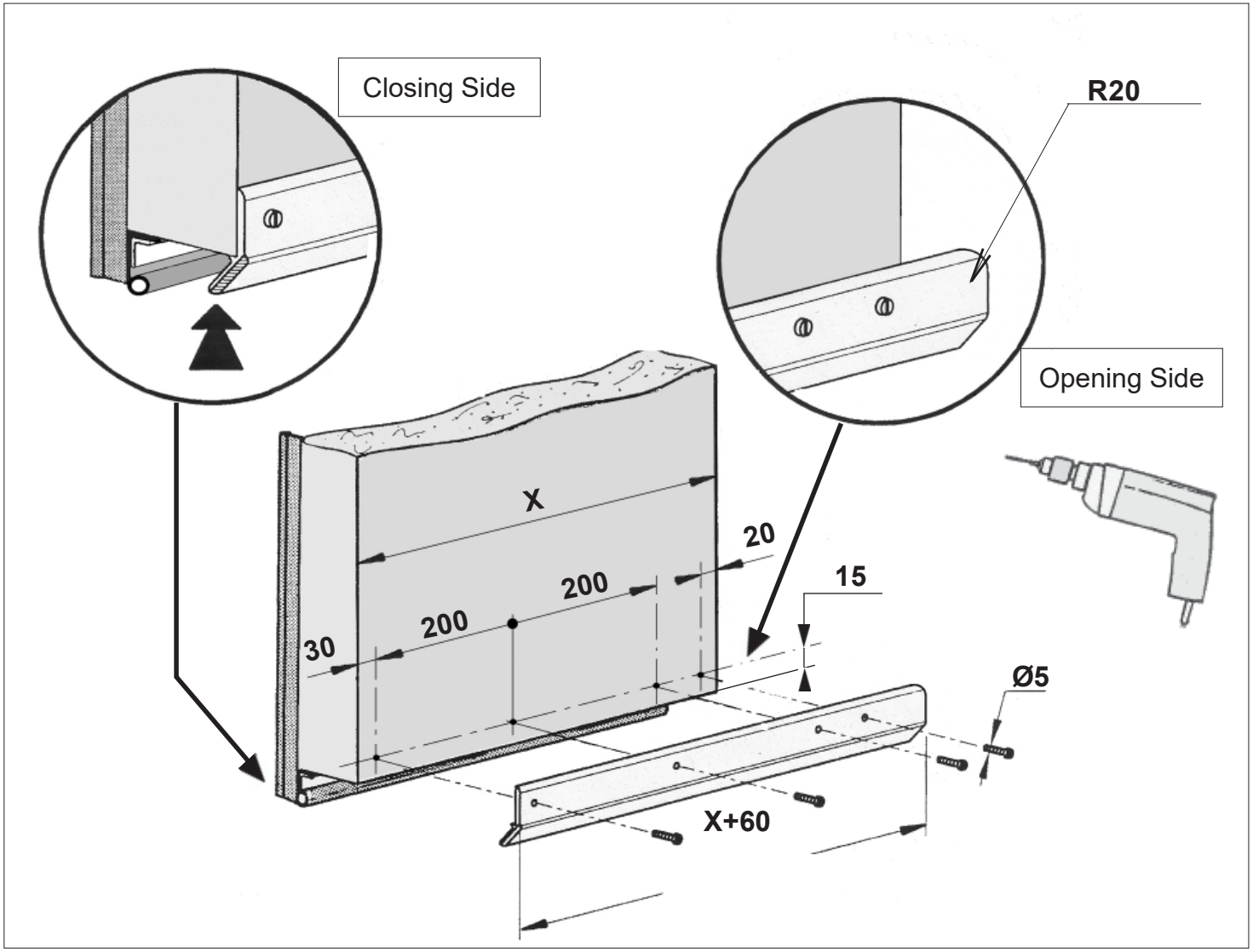

Step 5.

Mounting Holes for the hanging door brackets.

On the top left and right edges of the door blade drill and tap the fixing holes to attach the hanging brackets. Be mindful of the thickness of the support rail packer you are using.

The support rail bracket should be the same thickness as your door frame, if these are different you should adjust you hole locations accordingly. E.G If you were to use a 15mm thick door frame & a 25mm thick aluminium support rail profile the measurement would change from 20mm in from the gasket to 30mm.

The measurements are also based on the use of the Fermod 35mm Frame Gasket. Using a different gasket may require adjustment.

Note:

Be precise on your locations measuring from the inside of the door blade, as there is little horizontal adjustment available on the hanging brackets.

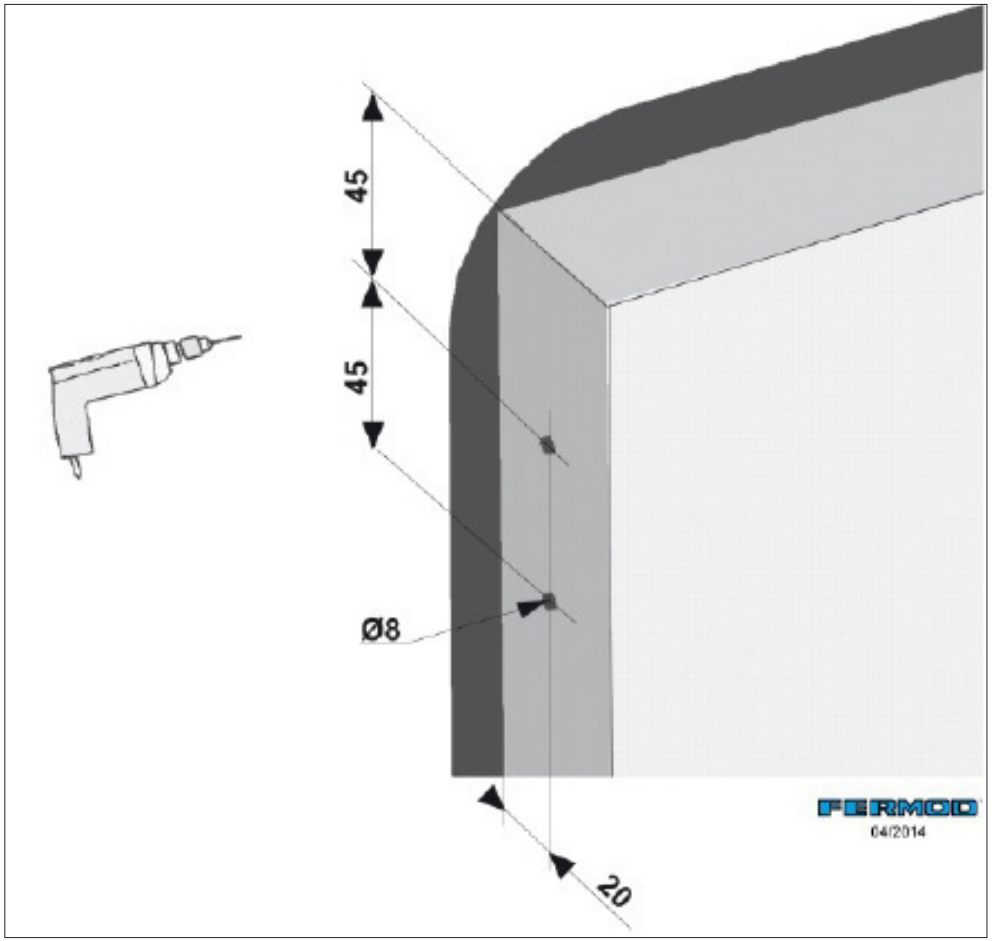

Step 6.

Cutting the main rail to length.

The main rail length must be double the door blade with plus an additional 220mm.

“X” equals the total door blade width.

Example: If the total door blade width is 1600mm, the main rail should be 3420mm. (1600 x 2 + 220).

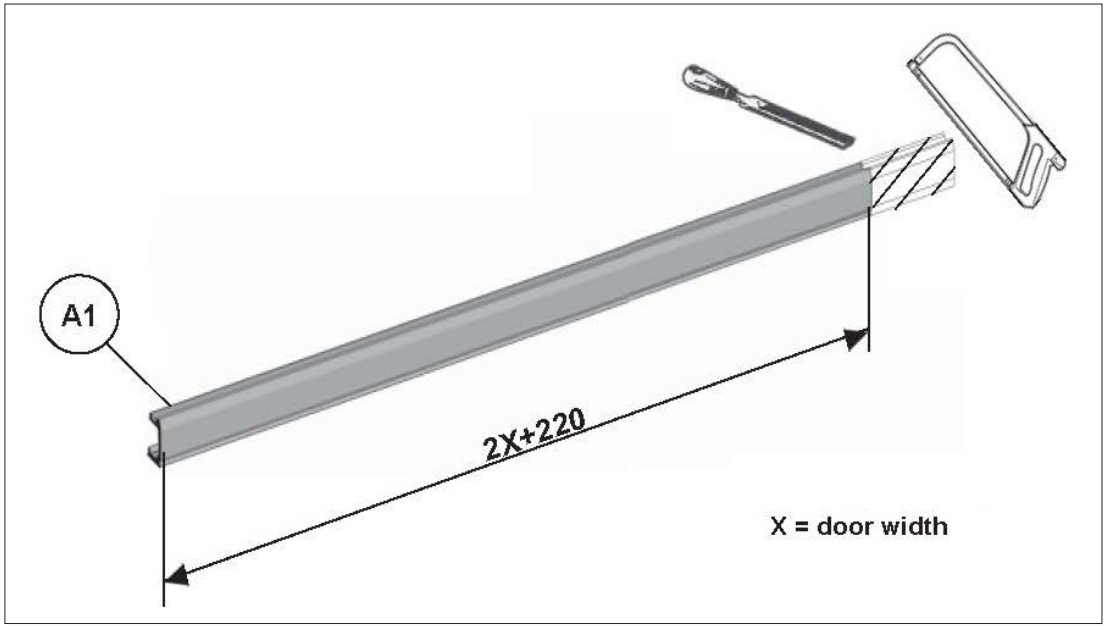

Step 7.

Cutting the running profile to length.

2 x running profiles cut to length are required.

The running profile must be equal to the door blade width less 45mm.

“X” equals the total door blade width.

Example: If the total door blade width is 1600mm, 2 lengths need to be cut at 1555mm. (1600 - 45)

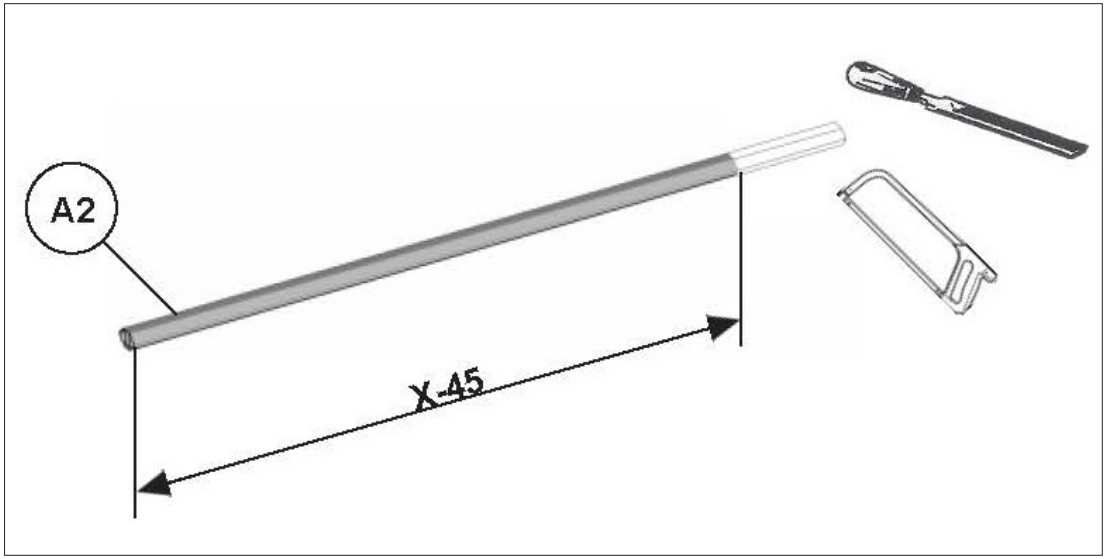

Step 8.

Assembly of the ramps, running profile and rail stops.

Note. The drawing shows a left hand opening door and should be reversed for a right hand opening door.

- Slide the running profile, ramps and clamps into the rail (see drawing for mounting order)
- Tighten the clamp/closing side. Clamp should be flush with the end of the main rail.
- Opening side, push the clamp so all parts are in contact and tighten.
- Slide the rail stops onto each end of the rail and temporarily tighten.

Quick Reference Tips.

• Make your aluminium support rail the same length as your main rail for simple calculations.
• Fix the rail holder brackets to the support rail in the workshop prior to going to site.We recommend that the brackets are fixed using a bolt, nut & washer combination. This can be achieved in the workshop by cutting or drilling holes in the back of the support rail to gain access with a socket.

The essential measurements:

• The bottom centre mounting hole on the closing side is 194mm from the end of the support rail.
• The bottom centre mounting holes on the opening side is to be 206mm from the end of the support rail.
• The centre rail holder bracket should be positioned half way between.
• Mark the centre of your clear doorway opening
• Calculate 1/2 the size of the door blade minus 90mm,eg. door blade 1030 ÷ 2 - 90mm = 425mm.
• Measure from the centre of the clear opening towards the closing side & mark.
• Calculate Door Blade overlapping height above the clear opening + 84mm. e.g Door overlap is 65mm + 84mm = 149mm.
• Measure up 149mm from the top of the clear opening & this is the location point of the bottom centre mounting hole.
• You can now locate your support rail holder brackets. Fix the support rail to the wall ensuring it is level.

Step 9.

Attach the rail holder brackets to the support rail/wall.

It is recommended that the support rail sits on top of the door frame to provide extra support.

Refer to drawing.

X=Door Blade width.
L= Clear opening width.
R'= Overlapping height (minimum 50mm) - (Y+32) - H.
Y = Door height.
H= Clear opening height.

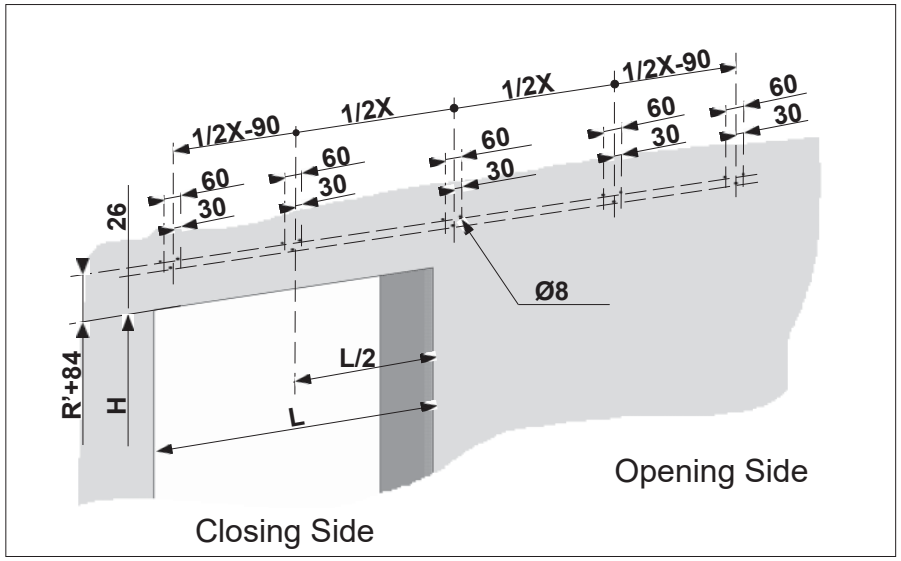

Step 10.

Mark and drill the fixing holes for the rail brackets.

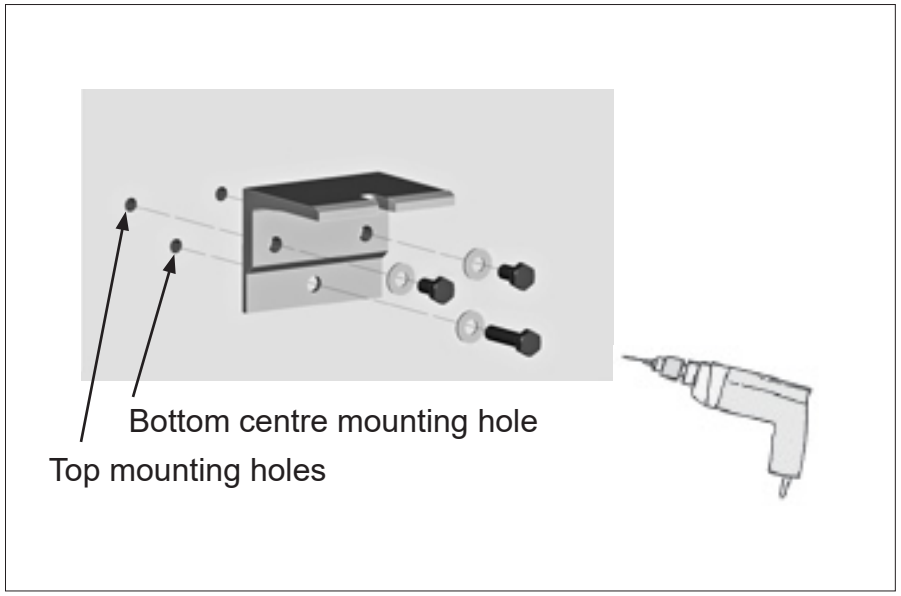

Step 11.

Attach the main rail to the rail holder brackets.

1. Slide the 3 fixing nuts into the main rail profile and attached each using the bolts & washers provided.

2. Adjust the end of the closing side to the distance shown in fig.B

3. Refer to drawing on page 3 for the distance from the support rail to the face of the main rail, (89.5mm).

4. Tighten the fixing screws.

Note:

After hanging the door the installer may find that the top gasket is tight against the frame causing the bottom of the door to be pushed outwards. This will affect the performance of the door. In this case, loosen the top bracket screws and adjust the top rail outwards.

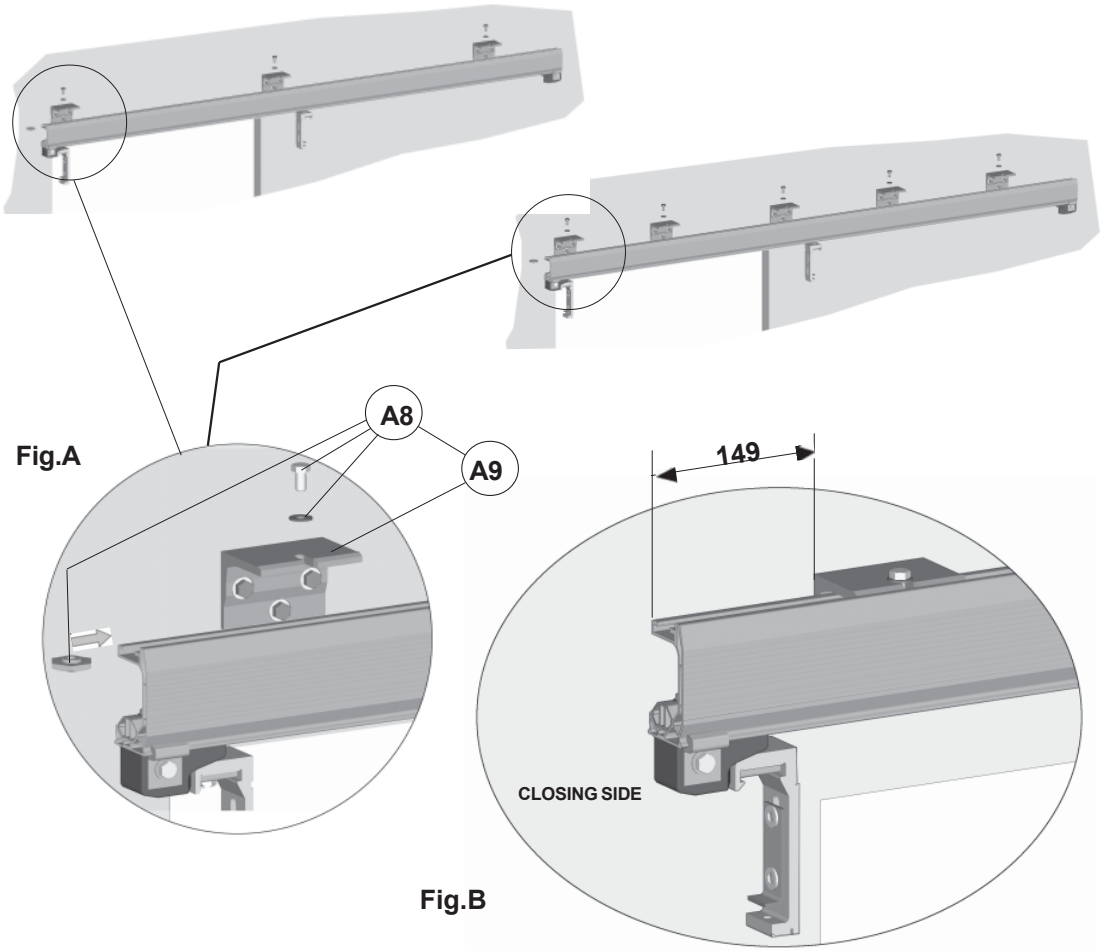

Fig.A

Fig.B

Step 12.

Install closing & opening side floor guides.

E = Door blade thickness (excluding gasket).

Example: If door blade thickness is 75mm the measurement out from the frame will be 112mm.

R = Overlapping width.

Example: If the door overlaps the frame 50mm on each side the following measurements would apply.

Fig.a R - 46 = 4mm
Fig.b R + 1 = 51mm

Note: If fixing through floor tiles drill a 5mm pilot hole before inserting the Masonary Anchors other wise you may damage the tile.

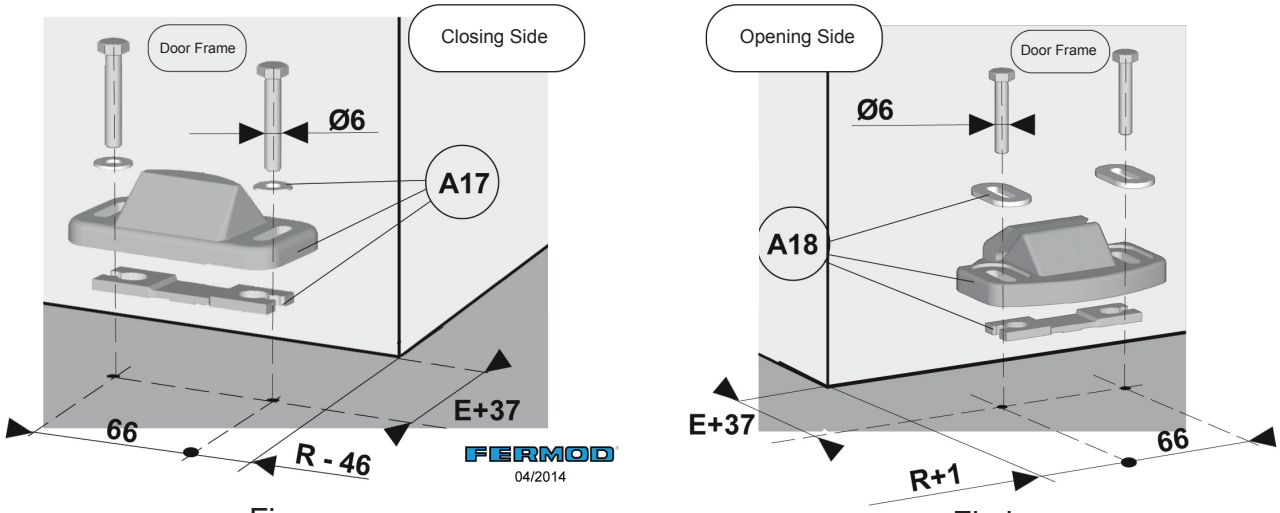

Fig.a Fig.b

Step 13.

Install the door brackets on the main rail and running profile. Install each door bracket from the centre ramp and slide to the left & right.

Step 14.

Attach the door brackets to the door blade.

1. Wedge Up the door blade & bolt/screw the door brackets into the previously pre-drilled & tapped holes.

Step 15 - Adjust the door.

1. With the door in the closed position, the floor and frame gaskets should create a firm seal, however the gaskets should not be squashed and out of shape. If the seal at the top of the door is too tight it will push the bottom out and guides will not run smoothly.

2. When the door is running, the gaskets should not touch the frame or floor.

3. Height adjustment can be achieved by adjusting the door brackets as shown.

4. Tightness against the frame can be adjusted by adjusting the floor guide. See Fig A & B on the next page.

5. Loosen A for horizontal adjustment then tighten.

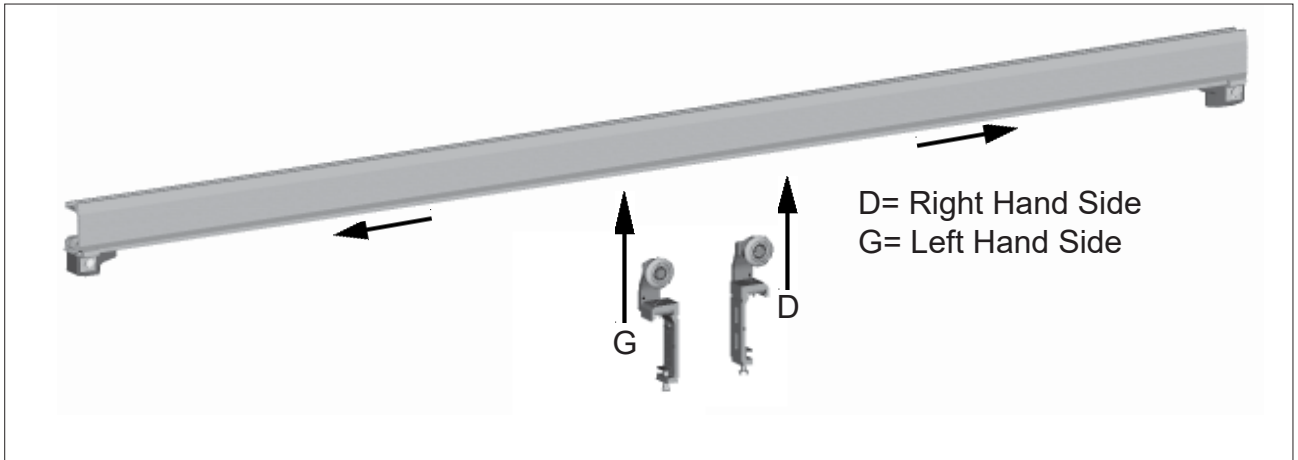

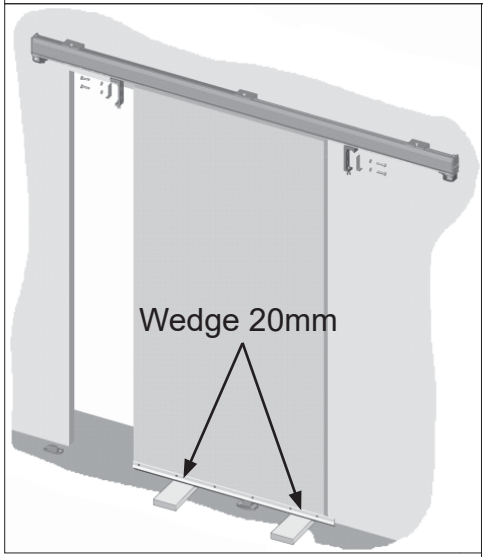

TO ADJUST DOOR:

Loosen screws C 1/2 turn.
Tighten or loosen screw B
Lock screw C

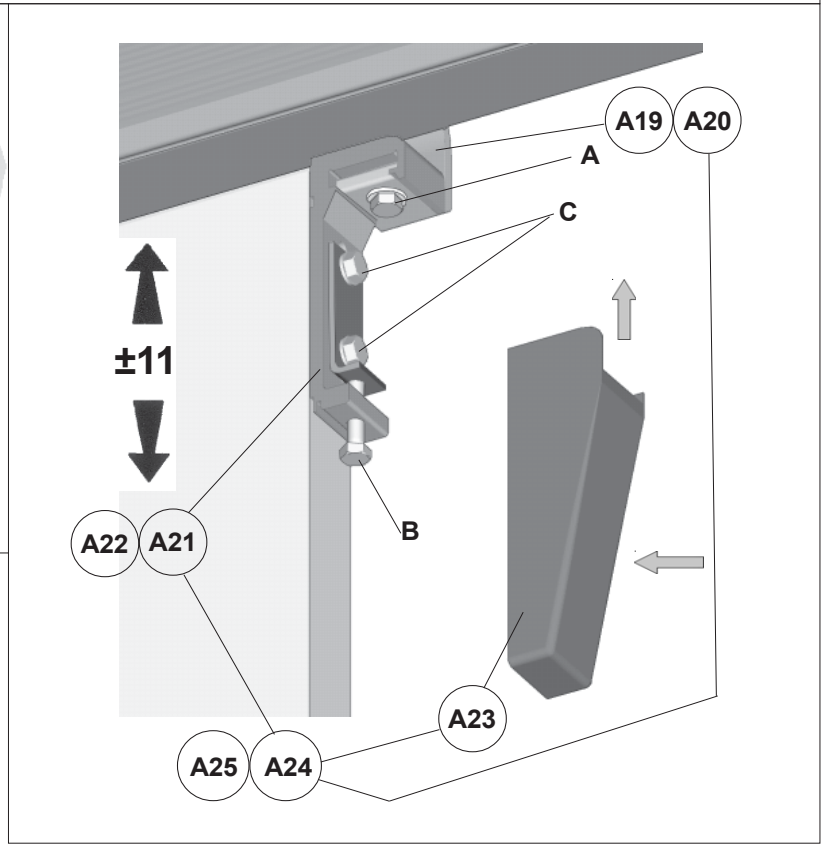

Step 15 (Continued)

Adjust the door.

Fig.A. Opening side floor guide in the open position.

The guide allows for 7mm +/- adjustment.

Fig.B. Closing side floor guide in the closed position

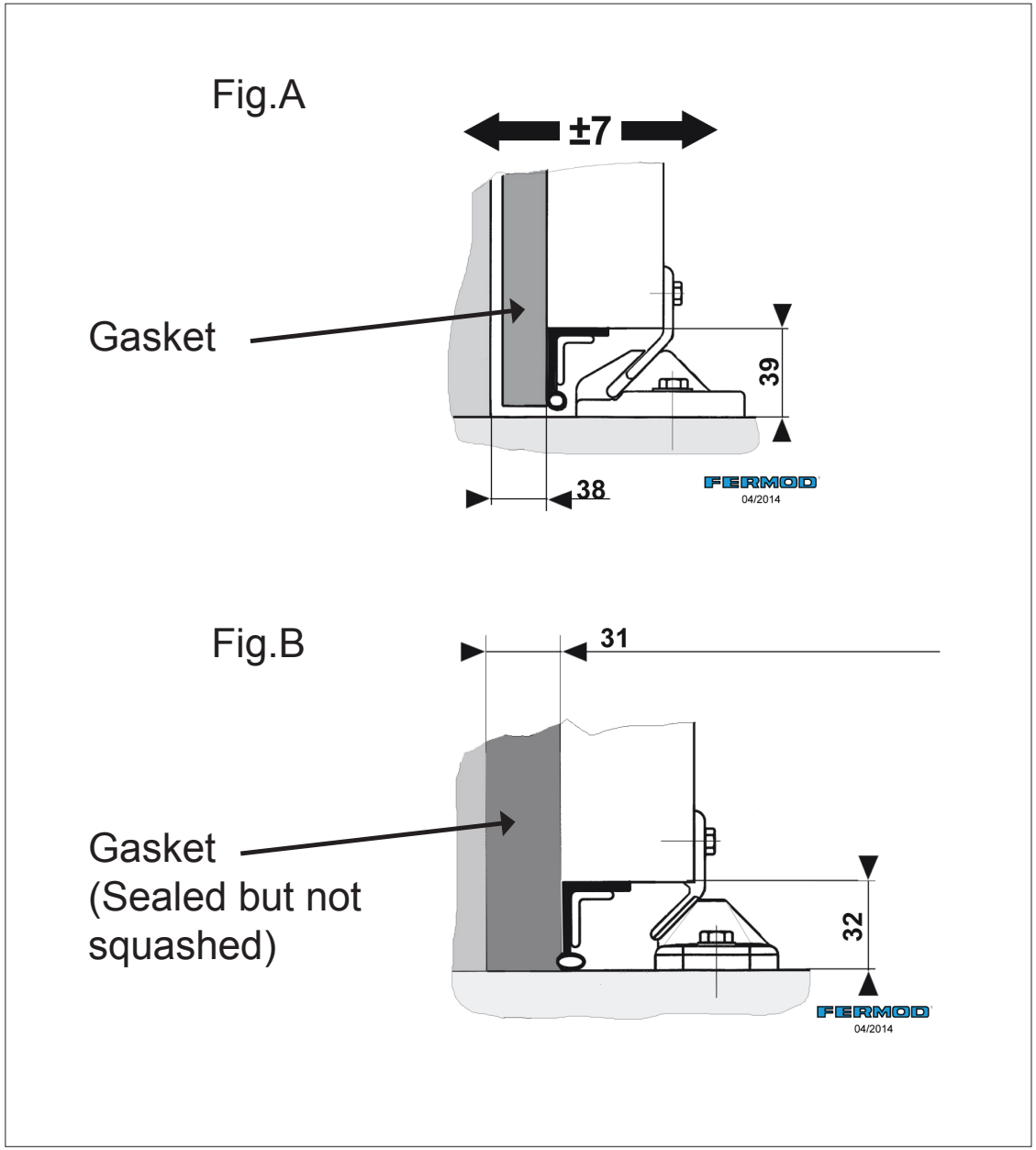

Step 16.

Attach the trolley covers.

To attach push in and straight up. To remove slide straight down.

Note: Take care with the trolley covers as the plastic lugs are easily broken if forced the wrong way

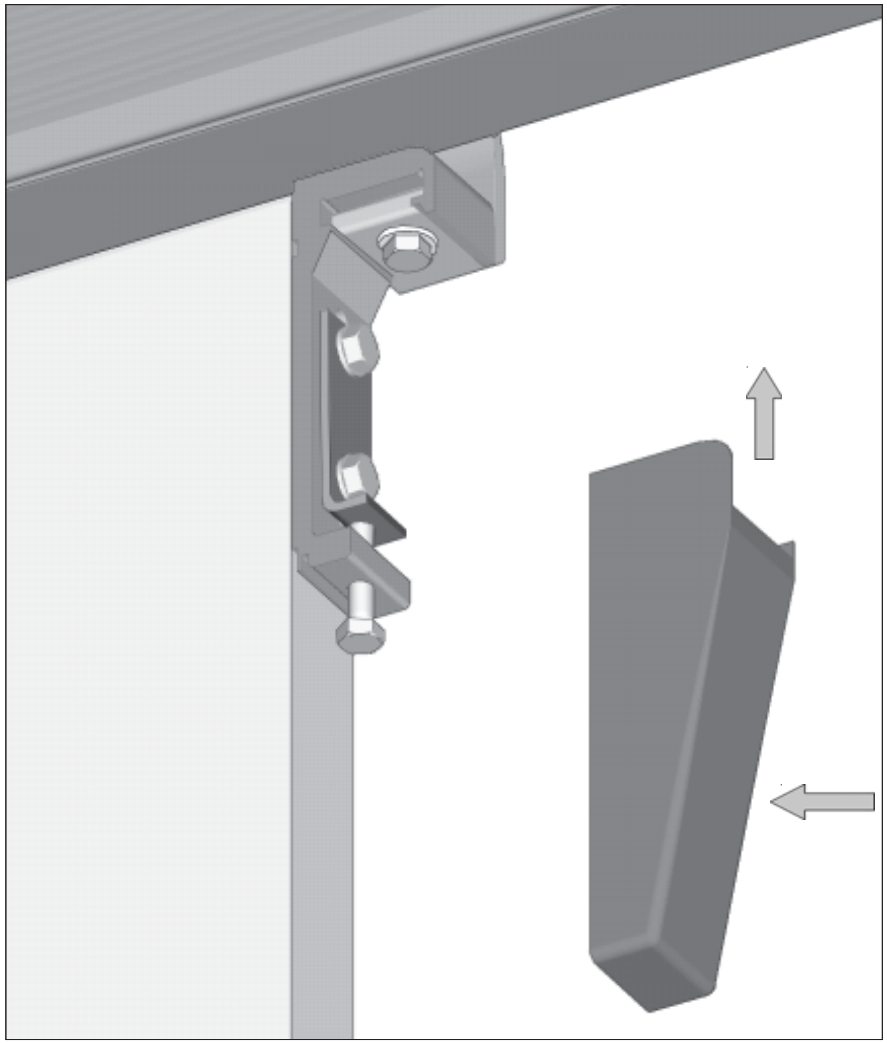

Step 17.

Attach the final covers.

1. Cut to size and attach the rail upper cover (A10). This is a dirt and hygiene protection feature

2. Attach the 2 x rail end covers. (A26)

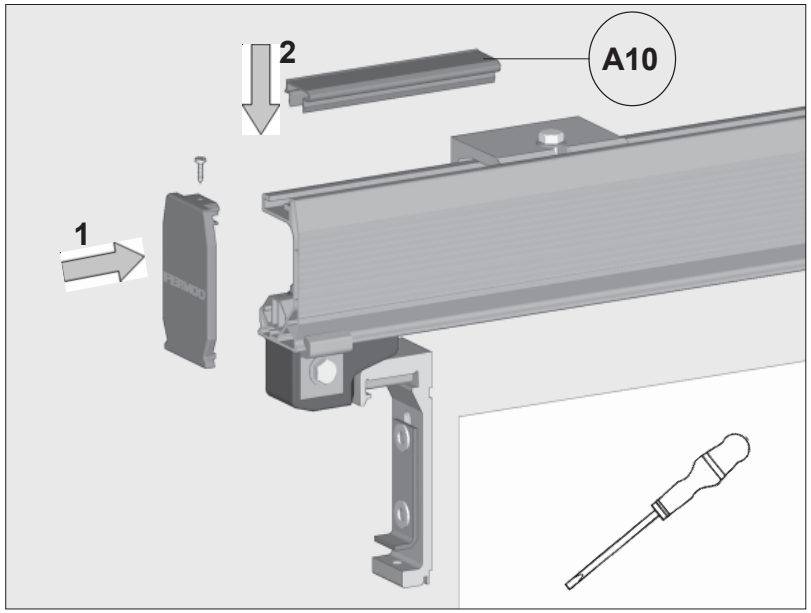

Step 18.

Adjust the opening and closing side stops.

1. Adjust the stops and tighten the screws as shown.

X = Width of door.

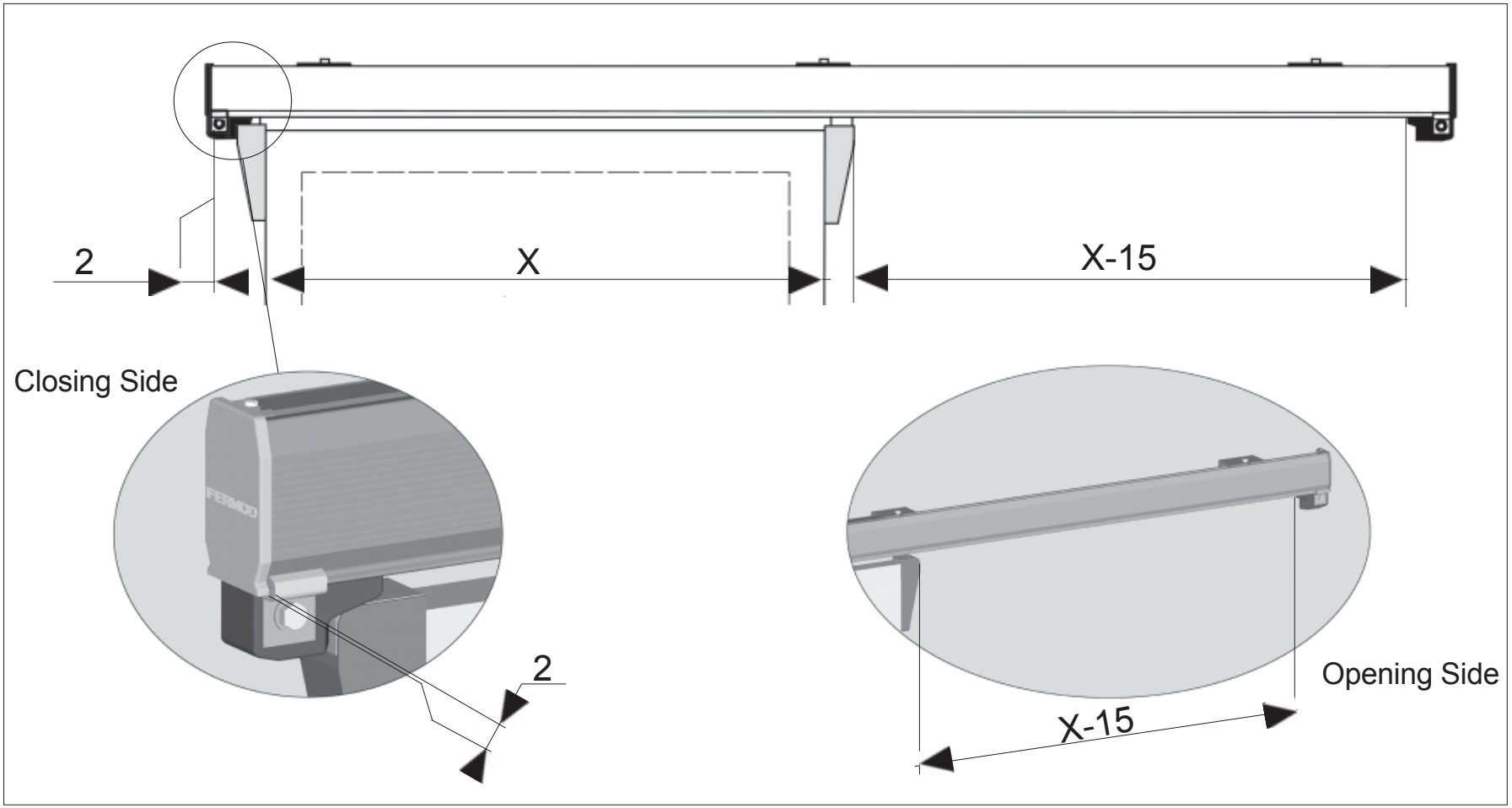

Step 19.

Attach the external lever handles.

The external lever handle can be attached to the door blade prior to going to site. To comply to Australian Standards the area where the hand grips the handle should be 1000mm - 1100mm from the floor.

See drawings for optimal anchoring locations.

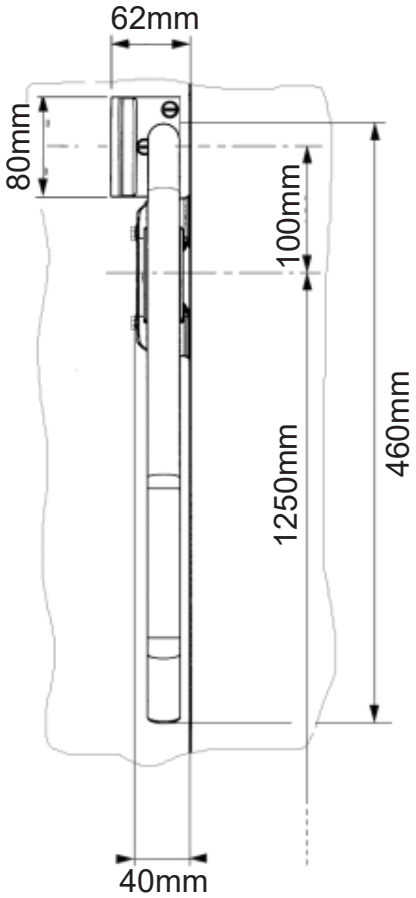

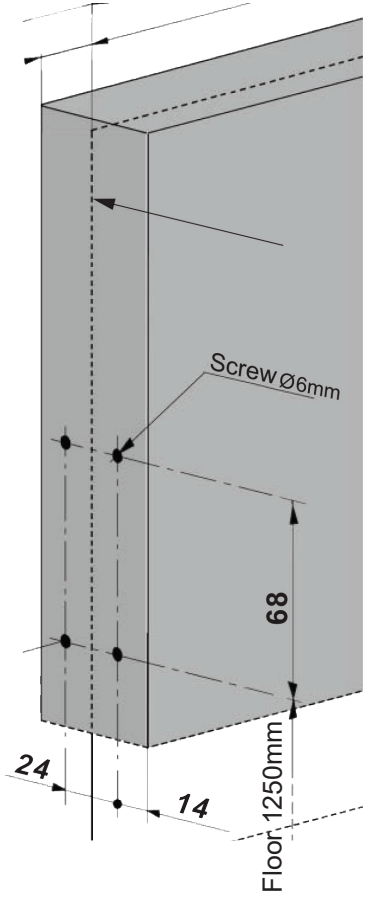

Step 19 Continued.

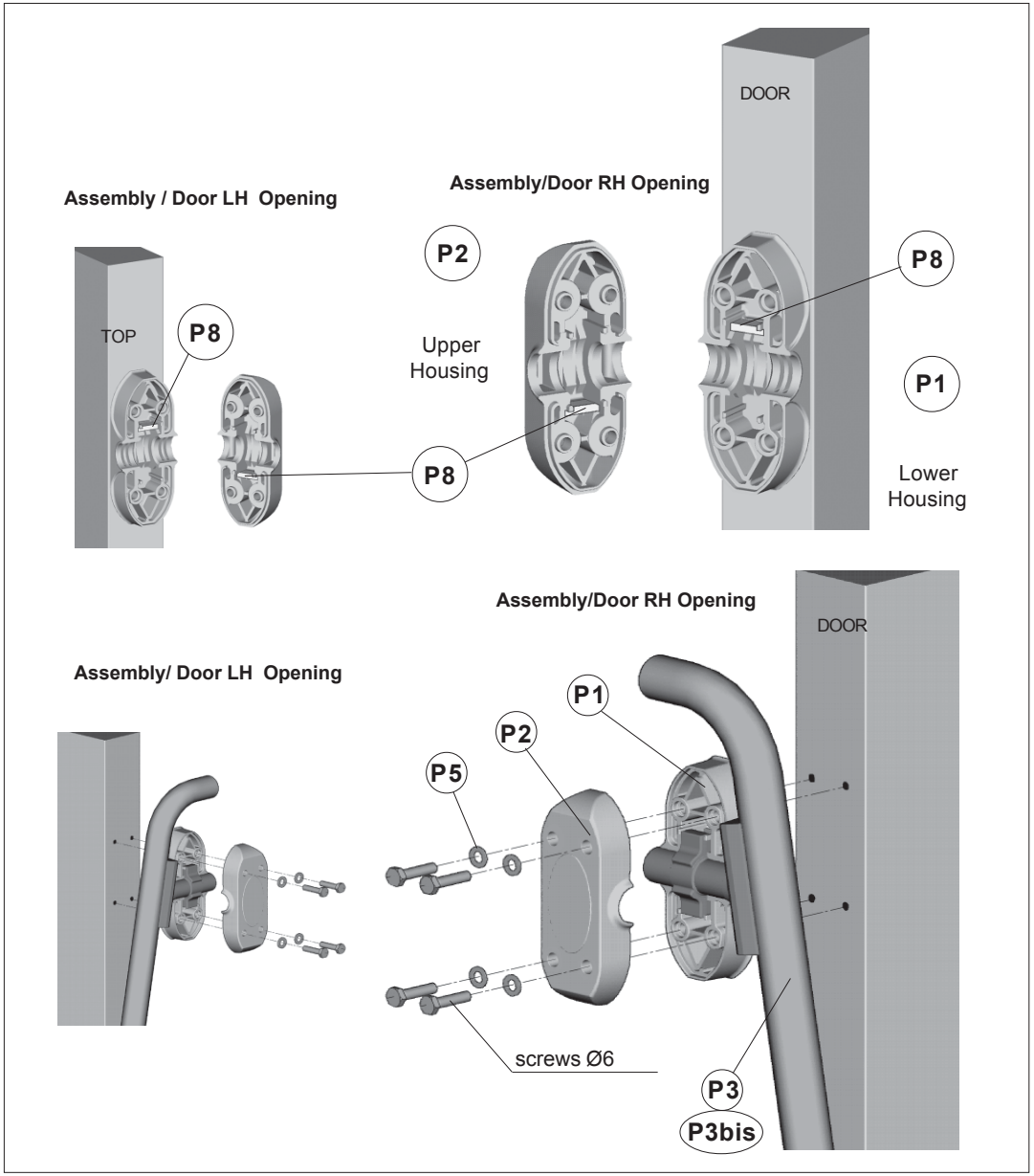

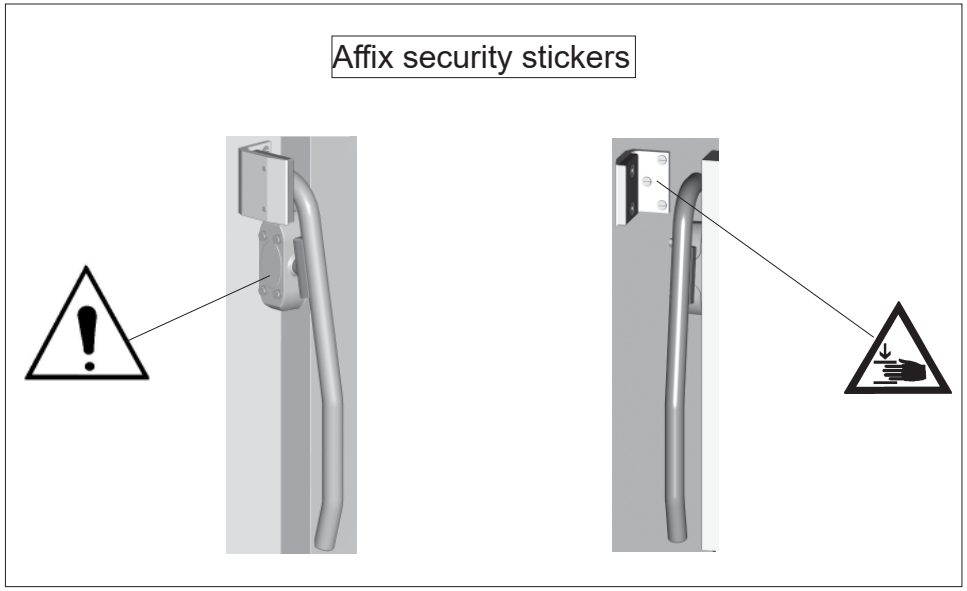

Step 19 Continued.

Recomended installation method of the lever handle strike when fixing to insulated wall panel.

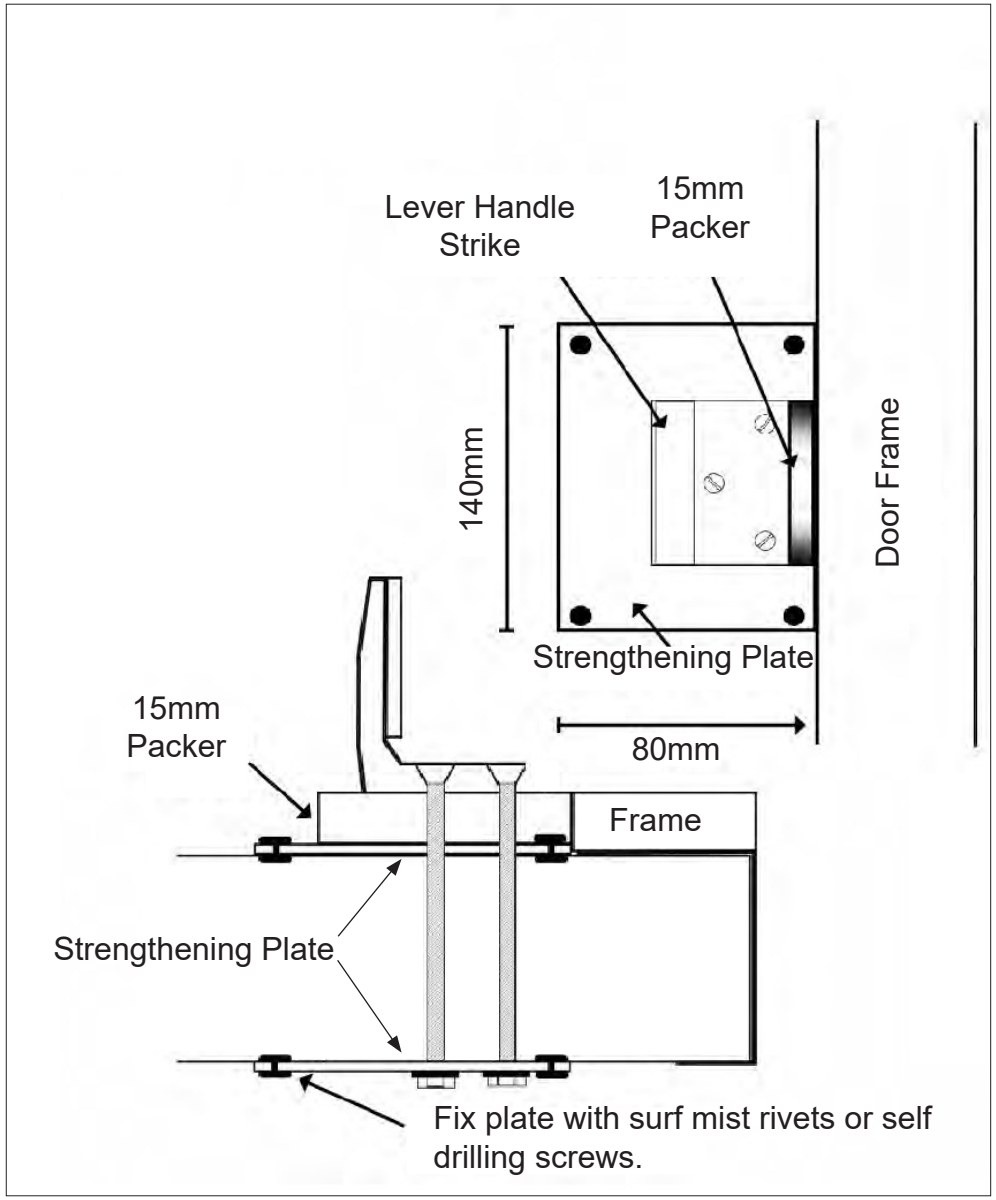

Step 19 Continued.

Attach the internal lever handles.

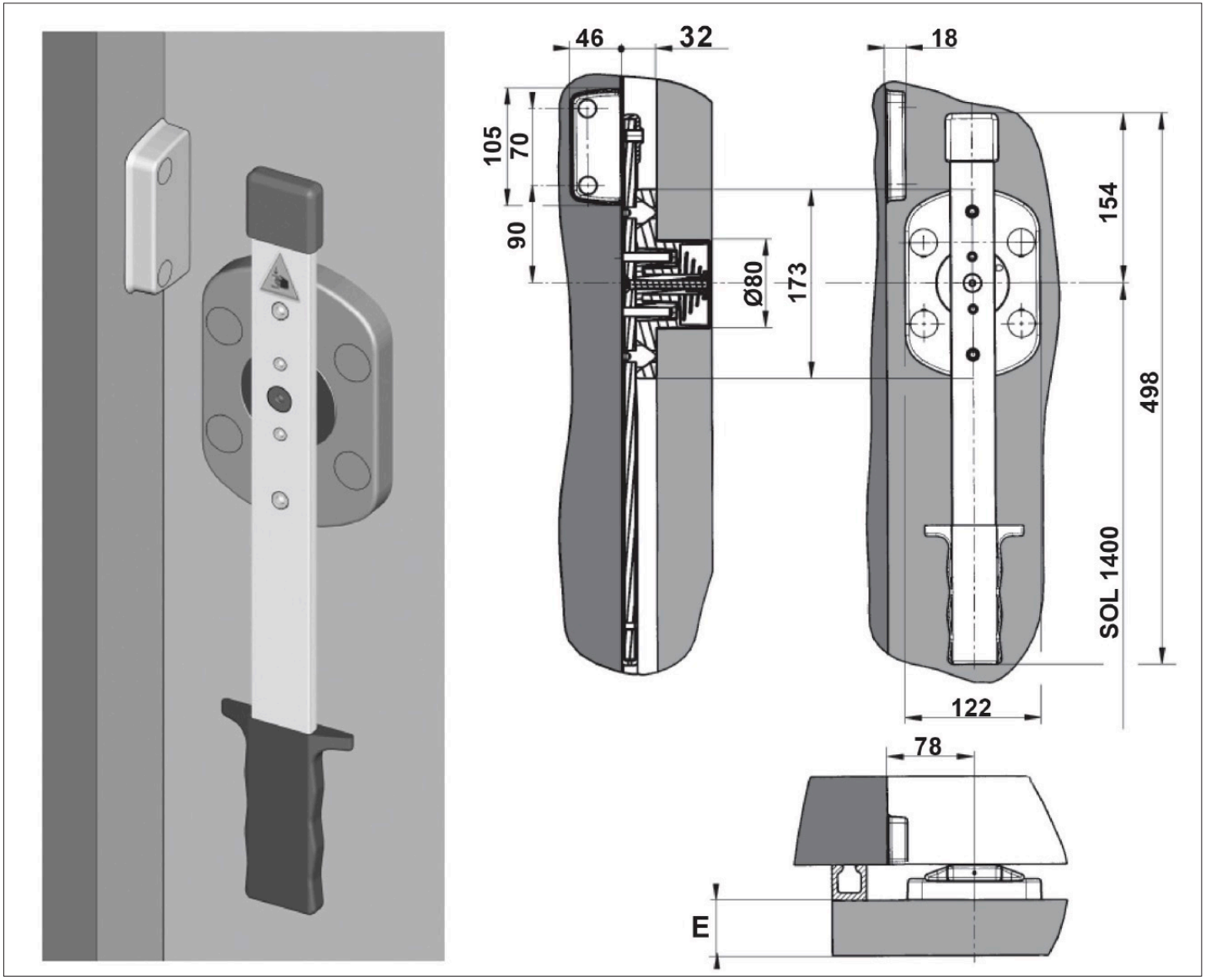

Step 27 Continued

Hole location on the door blade in the closed position.

Note:

Some door construction methods have a 10mm to 15mm thick PVC thermal break / packer around the inside edge of the door where the frame gasket is fitted. If this is the case a packer is required to be used for the internal handle. This is available as an additional item to the standard kit, stock code **F8530P**.

Failure to install the packer may mean the internal lever handle will not connect with the strike.

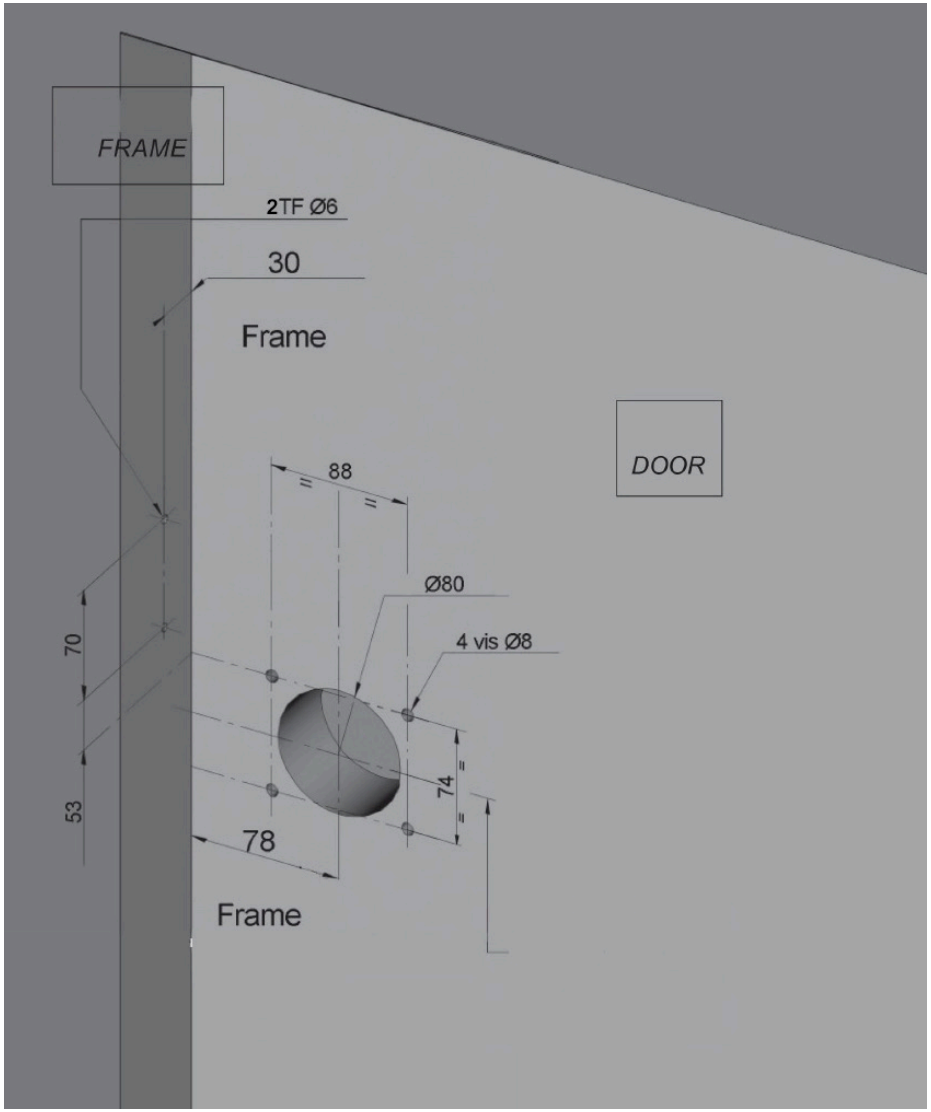

Step 19 Continued

Handle assembly.

1. Turn internal butt in the required position.

2. Fix the lever handle with the screw supplied

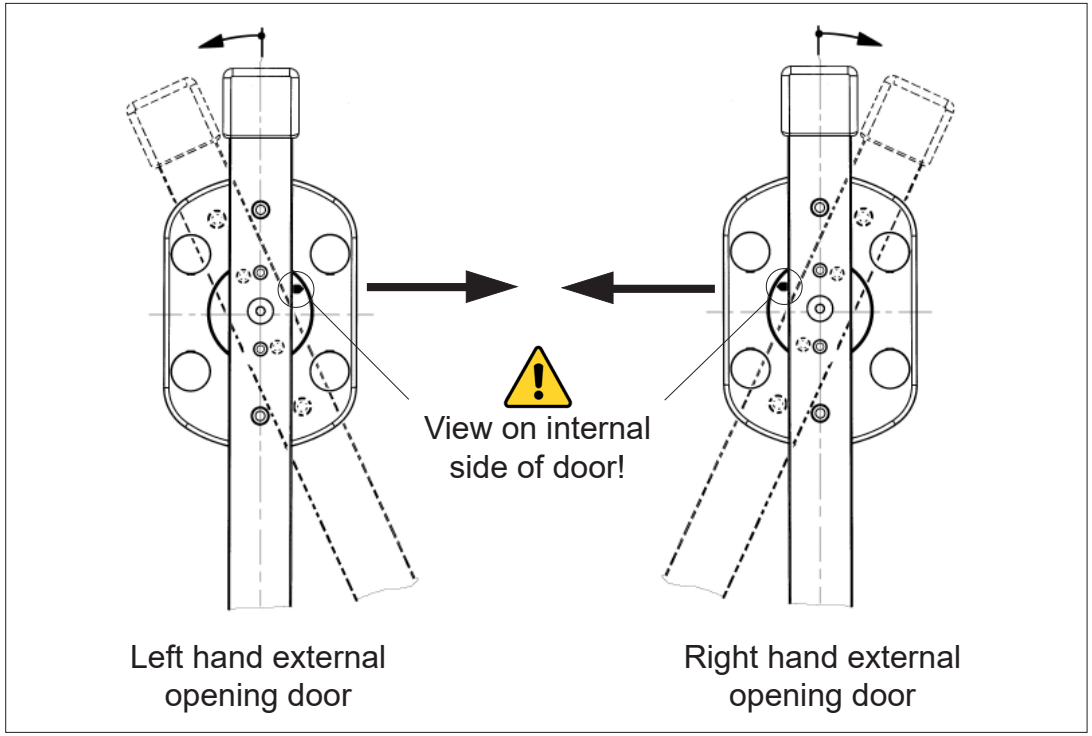

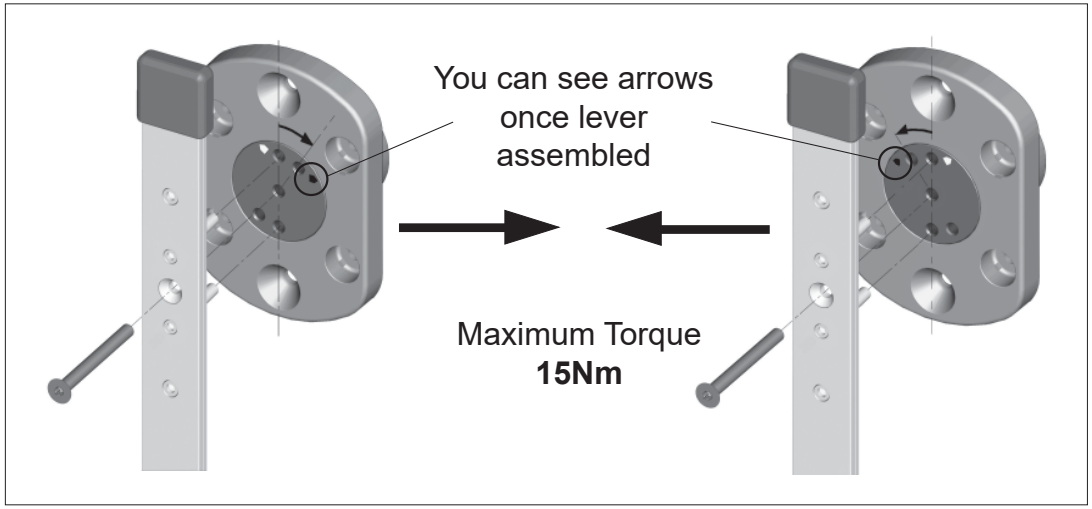

Step 19 Continued

1. Mounting of the lever

2. Mounting of the strike.

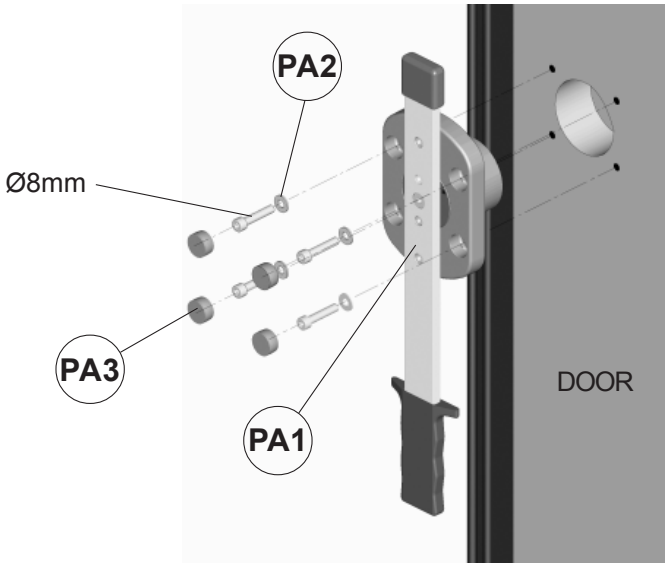

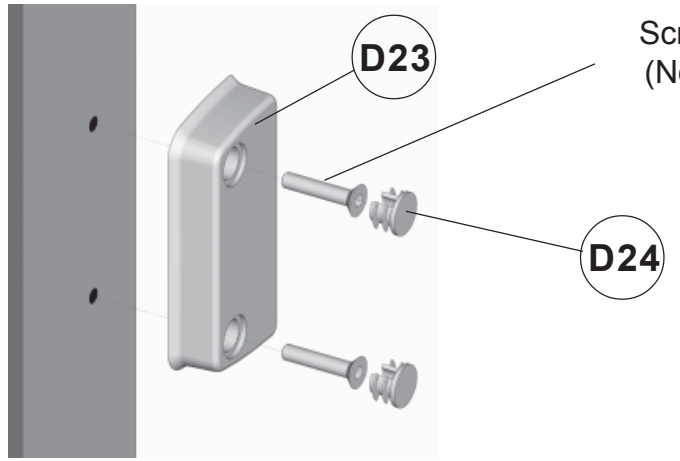

Cleaning and Maintenance

Cleaning:

Cleaning of the door must include cleaning of the floor.

The equipment should be cleaned using cleaning agents that are compatible with the materials of the supplied product.

For dilution percentages, refer to the instructions of the cleaning agents to be used.

Materials:

Gasket: EPDM or natural rubber.
Rail: Anodized aluminium.
Trolleys: Steel.
Handles: Stainless steel, anodized aluminium, composite.
Guiding profile: anodized aluminium.
Floor guide opening side: composite.
Floor guide closing side: cupro-alu nickel plated.

Maintenance

The final user must carry out periodical yearly or twice yearly checks, or have them carried out.
Maintenance must be carried out by qualified staff.
When replacing a component, choose the right component from the manufacturer's after sales service, and respect the instructions of the different sections in this manual.

Main Consumable Parts

Consumable Part	**Regularity of maintenance**	Criteria for scrapping
Rollers - Ramps	20,000 cycles or yearly	Rolling part uneven Fissures on rollers or on ramps
Guiding profile	2000 cycles or quarterly	Wear marks > 3mm
Guiding parts	2000 cycles or quarterly	Fissures or missing plastic parts
Floor gasket	When black dust on floor or quarterly	Cut in rubber
Frame gasket	When black dust on floor or quarterly	Cut in rubber (especially in corners)

For enquiries, please e-mail info@crh.com.au or call us at 1300 274 287